ELECTRONIC IN DIE TAPPING UNIT FOR VERY HIGH VELOCITY

SL. 2005.1 / 2

INTERCOM

Excellence in tool solutions

MADE IN ITALY

www.intercomonline.it

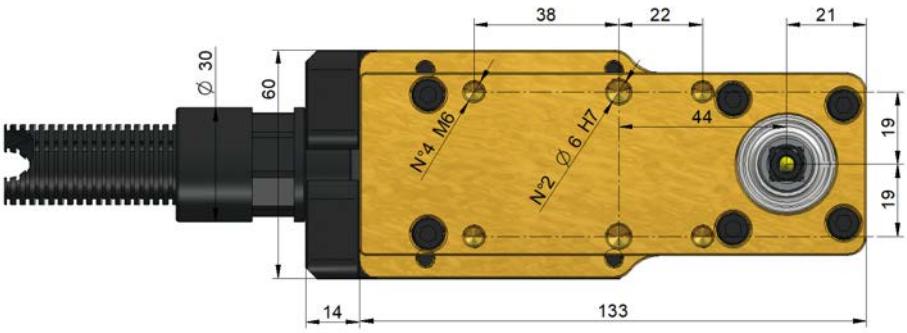

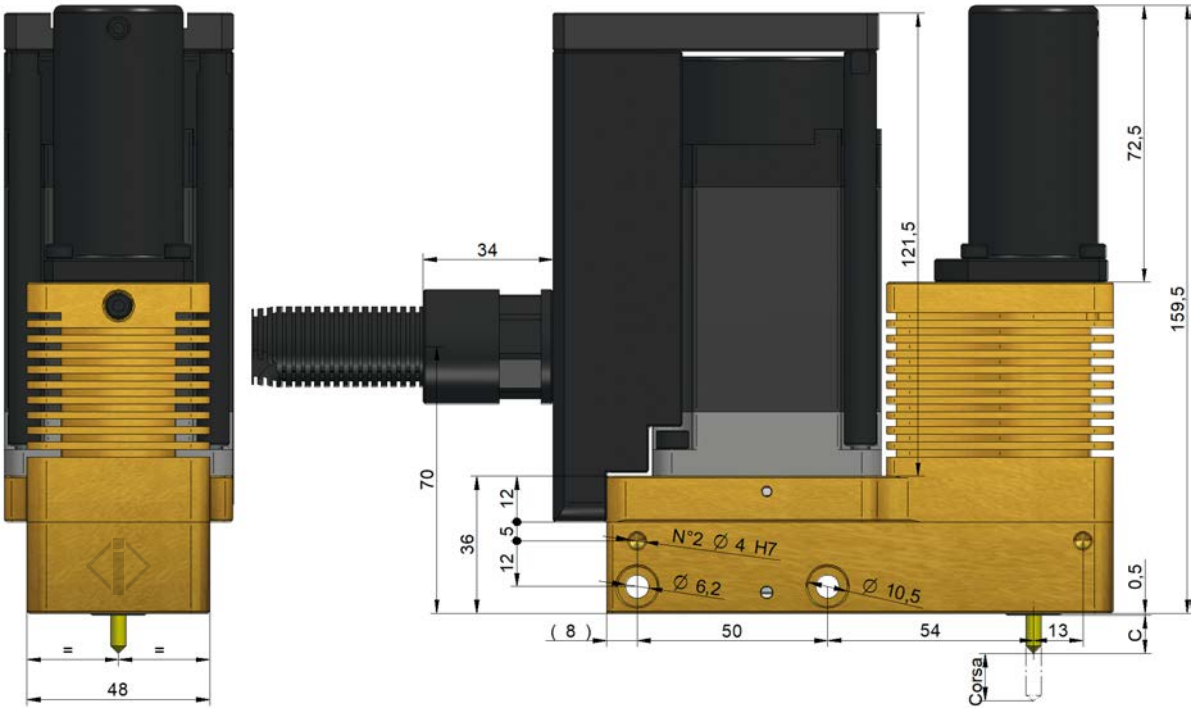

Tapping unit type	Motorization	C	Axis Stroke
SL.2005.1 M2	400 W	3 ± 1	~50 mm
SL.2005.1 M2.5	400 W	5 ± 1	~50 mm
SL.2005.1 M3	400 W	7 ± 1	~50 mm
SL.2005.1 M4	400 W	11 ± 1	~50 mm
SL.2005.1 M5	400 W	31 ± 1	~50 mm

Suggested pre-hole diameters						
M2	M2,5	M3	M3,5	M4	M5	M6
Ø1,85	Ø2,3	Ø2,8	Ø3,3	Ø3,7	Ø4,7	Ø5,6

ISO 6HX pre-hole diameters						
M2	M2,5	M3	M3,5	M4	M5	M6
Ø1,8 - 1,85	Ø2,27 - 2,33	Ø2,75 - 2,81	Ø3,2 - 3,27	Ø3,65 - 3,73	Ø4,6 - 4,69	Ø5,5 - 5,6

ISO 6GX pre-hole diameters						
M2	M2,5	M3	M3,5	M4	M5	M6
Ø1,81 - 1,86	Ø2,28 - 2,34	Ø2,76 - 2,82	Ø3,21 - 3,28	Ø3,66 - 3,74	Ø4,61 - 4,70	Ø5,51 - 5,62

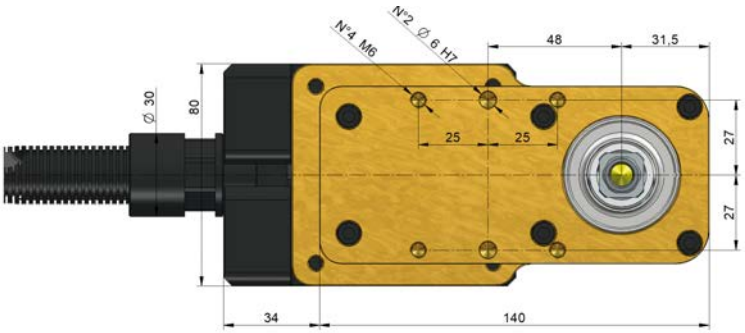

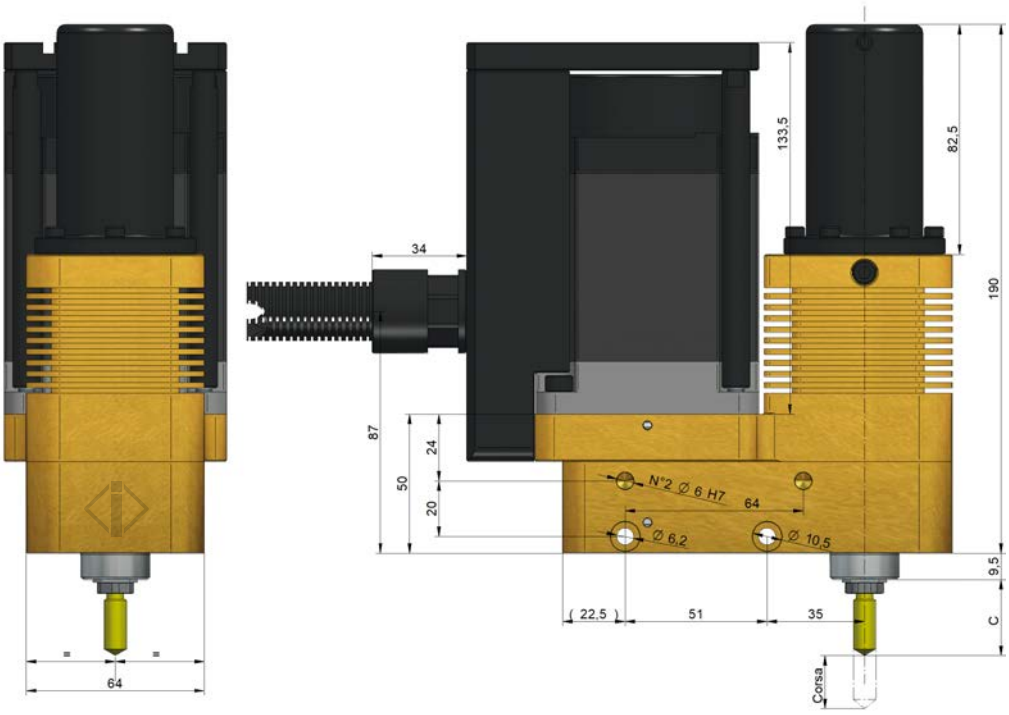

Tapping unit type	Motorization	C	Axis Stroke
SL.2005.2 M6	750W	27 ± 1	~50 mm
SL.2005.2 M8	750W	27 ± 1	~50 mm
SL.2005.2 M10	750W	27 ± 1	~50 mm

Suggested pre-hole diameters				
M6	M7	M8	M10	M12
Ø5,6	Ø6,6	Ø7,6	Ø9,4	Ø11,5

ISO 6HX pre-hole diameters				
M6	M7	M8	M10	M12
Ø5,5 - 5,6	Ø6,5 - 6,6	Ø7,37 - 7,49	Ø9,25 - 9,39	Ø11,12 - 11,28

ISO 6GX pre-hole diameters				
M6	M7	M8	M10	M12
Ø5,51 - 5,62	Ø6,51 - 6,62	Ø7,38 - 7,51	Ø9,26 - 9,41	Ø11,14 - 11,30

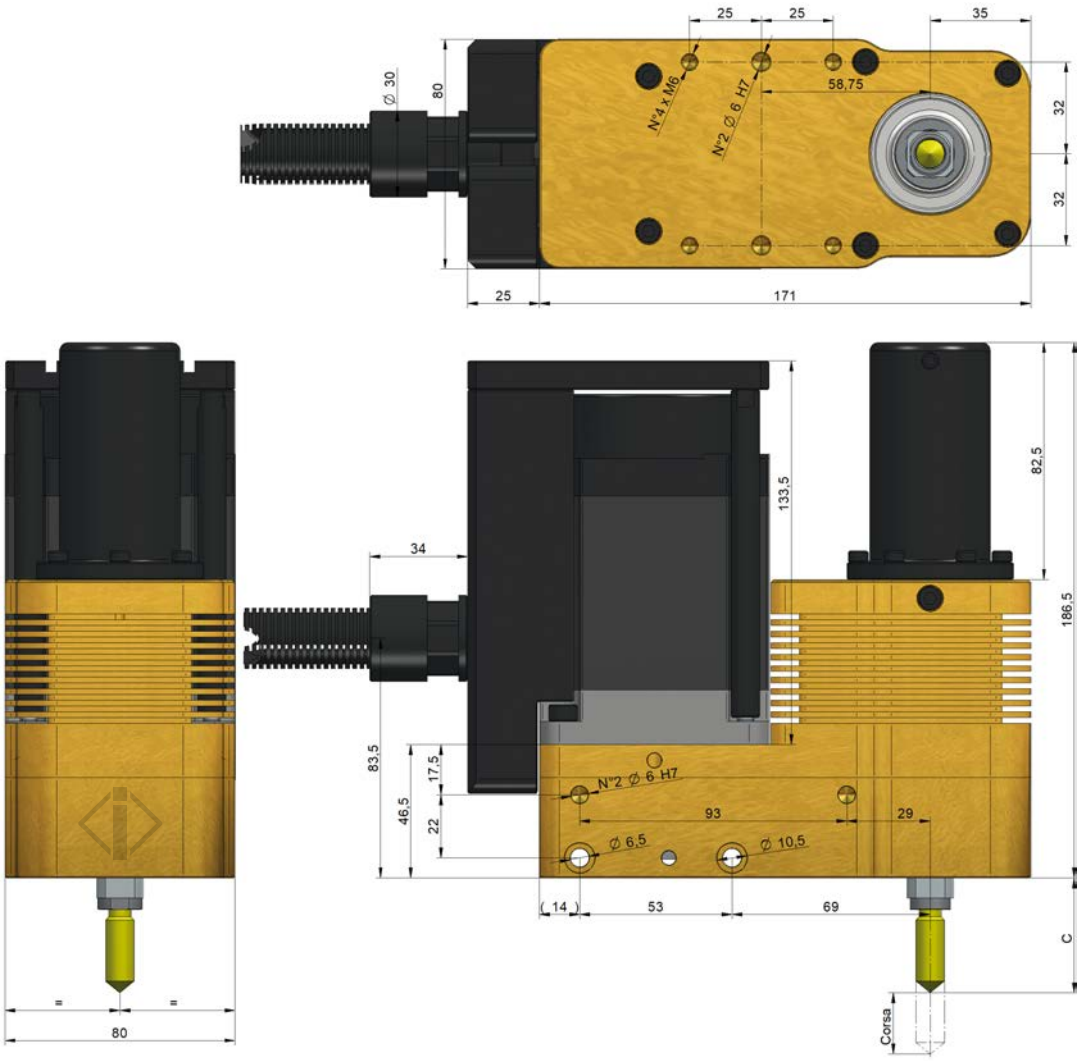

Tapping unit type	Motorization	C	Axis Stroke
SL.2005.2S M10	750W	40 ± 1	~50 mm
SL.2005.2S M12	750W	40 ± 1	~50 mm

ADVANTAGES:

- Threading by high velocity; up to 150 strokes/min (according to the diameter, height and material to thread)
- Easy installing and maintenance
- The unit is compact and speed, with an electrical-mechanical functioning, without any compressed air
- The threading operation is independet from any die stroke, in each position: horizontal, vertical and inclined
- Reduced spaces
- Automatical approach of the tap to the hole
- Automatical tap lubrication at each stroke
- Torque controlled
- Control that each thread has been properly done
- Thread on dead holes
- Left threading (on request)
- Multiple threading are possible

☐ Rolling

☐ Cutting

Material to be threaded: _____

Threading "M": _____

Thickness "H" of the thread: _____

How many holes to thread: _____

Time required for threading operation: _____

Types of threaded holes

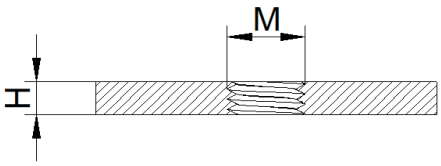

☐ Through hole

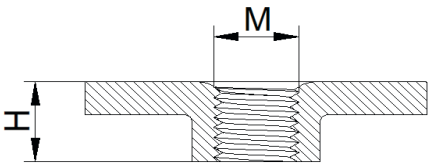

☐ Skirted through hole

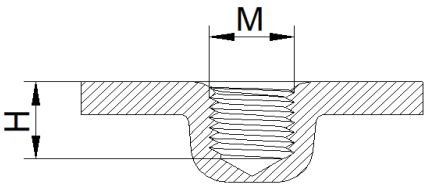

☐ Dead hole

Send by fax at the +39 02 95300023
or by e-mail at intercom@intercomonline.it

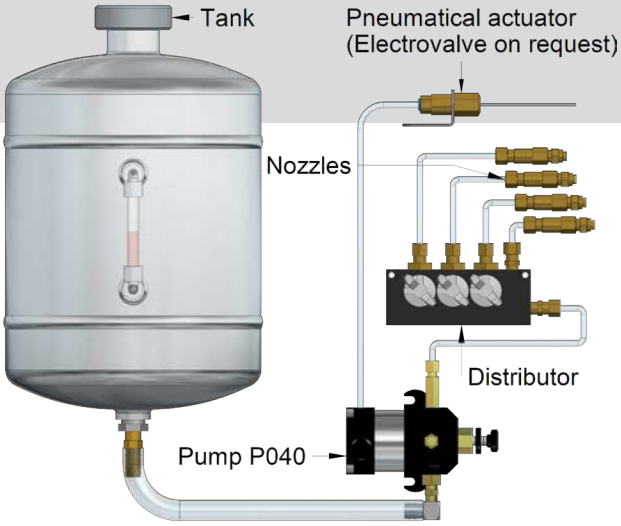

PresSpray Pumps

They spray lubricant under command as an instant spray, without air, so they are suitable instruments to lubricate a precise zone, just an example: a very precise point like a threading, or a wider area like a sheet. At each spray the oil is so heavy that it doesn't generate any fog. The particularity of these pumps is that they can dose the lubricating volume that is necessary to each press cycle and they can direction its way out through apposite nozzles, that create an homogeneous spray without air. They are simple to install, to configure and to use. According to the different types of nozzles there can be rectilinear, conical or fan type spray. An automatic lubrication in the dies and, in case of threading, directly on the taps, is a guarantee of long life and high performances. The operator won't have to take care of the lubricating process, paying his whole attention to the quality of the production. Presspray pumps are avaiable in different types, according to the volume of oil required.

Oils

Presspray pumps can work with different kinds of lubricants, high viscosity oils and light oils, wich can be carefully controlled.

Integral oil

It's suitable for cold steel deformation processes. It gives high performances in the fine blanking, traditional blanking, drawing, bending, minting and by the use of rolling taps, for both steels and stainless steels.

Emulsible oil

It's a universal oil suitable for scrap removing and cold deforming. It guaranties more high performances and longer life time to the parts of the die.

Both oils are excluded to prescriptions for inflammable oils.

Rolling taps

Rolling taps guarantee very high performances if compared to the conventional screw taps, avoiding the problems of scraps in the dies.
Rolling taps can even work at higher velocity than other taps and give more quality to the surfaces that they generate (less roughness).
They guarantee more resistance to the thread splitting, allowing shorter executions, with shorter die strokes and longer tap life.
There is a wide range of taps' type like TiN, TiCn coated or the new generation BLACK taps, metric threading ISO (with 6HX, 6GX, 7GX tolerances) and UNC or UNF.

Our technical office is always at your disposal for further questions or any suggestion on the best way to use our products.

Threading process

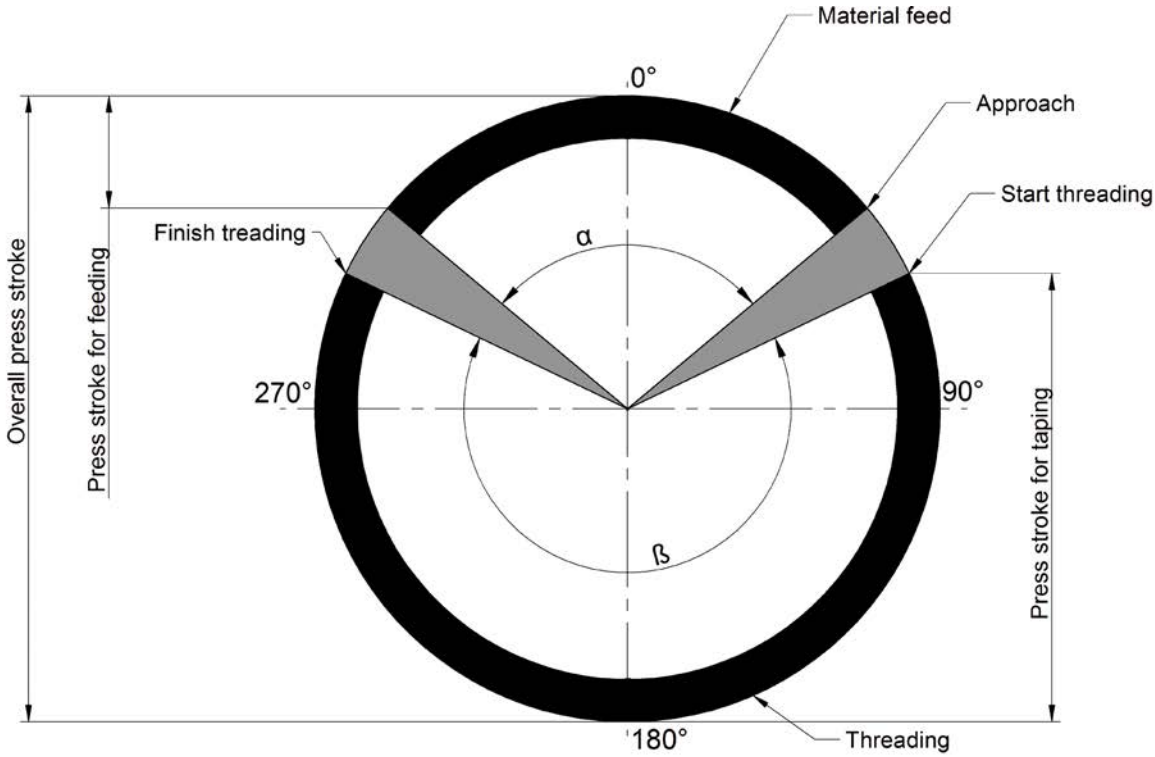

The smaller is the angle of material feed, the greater will be the time for threading, (more strokes / min).

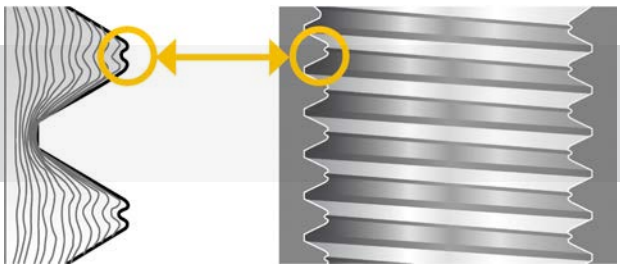

Rolling thread example

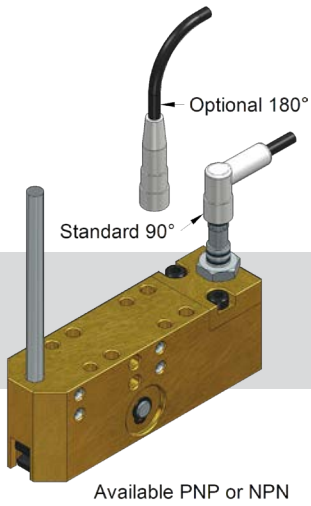

End threading controller

To check the production at 100% properly done

The electronic tapping unit is a unit that can make threading operations inside the dies and in special settings, in a very easy and simple way, autonomally, and independently from the stroke of the die. It works with a brushless motor and with a servo driver that control each threading step. Just one start is enough to make the threading autonomally and quickly, always with the possibility to regulate the velocity and the threading depth. It is also possible to control that the threading has been properly done.

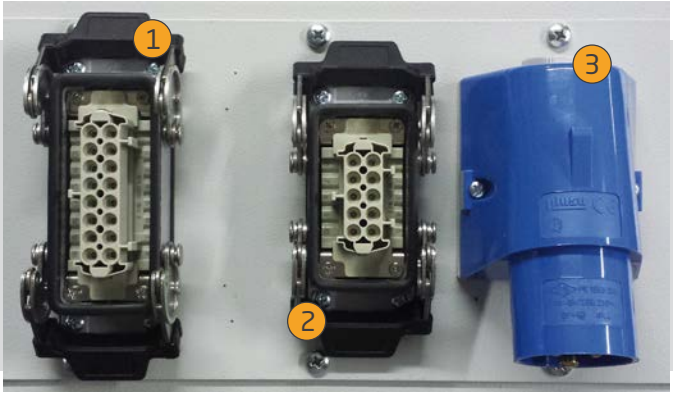

1. **SIGNALS CABLE**
2. **MOTOR CABLE (MOTOR+ENCODER)**
3. **POWER SUPPLY SOCKET**

1. **MASTER ON**
2. **PANEL CONTROL**

ELECTRICAL CHARACTERISTICS OF THE PANEL OF SINGLE UNIT CONTROL (PLC VERSION):

Power supply:
single-phase 230 Vac (+ 15%, -15%) 50 Hz (± 3 Hz))

Maximum absorbed current: 16 A

Approximate dimensions of the electronic box, including the size of the connectors:
height 500, width 400, depth 300
(dimensions in mm)

NEW WHEEL CONSOLE WITH TOUCH SCREEN

NEW

ELECTRICAL CHARACTERISTICS OF THE CONSOLE OF 2-UNITS CONTROL (TOUCH SCREEN VERSION 7"):

Power supply:
single-phase 230 Vac (+ 15%, -15%) 50 Hz (± 3 Hz)

Maximum absorbed current: 16 A

Approximate dimensions of the console, inclusive of the overall dimensions of the connectors and the flashing light:
height 1300, width 700, depth 500 (dimensions in mm)

ELECTRICAL CHARACTERISTICS OF THE CONSOLE FROM 4 TO 6 UNITS (TOUCH SCREEN VERSION 10 "):*

Power supply:
three-phases 400 Vac (+ 15%, -15%) 50 Hz (± 3 Hz)

Maximum absorbed current: 32 A

Approximate dimensions of the console, inclusive of the overall dimensions of the connectors and the flashing light:
height 1300, width 700, depth 500
(dimensions in mm)

*: 8 units version available on request.

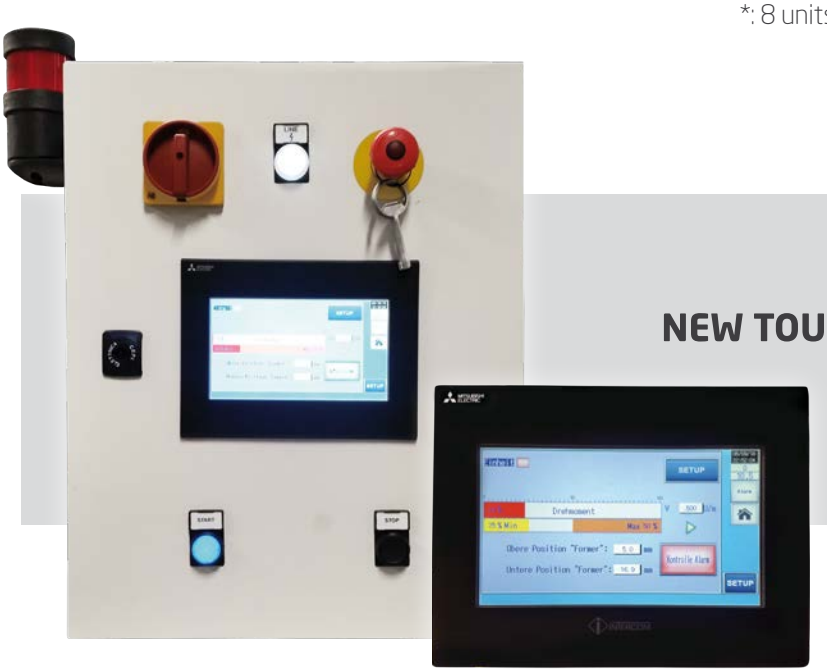

NEW TOUCH SCREEN

NEW

ELECTRICAL CHARACTERISTICS OF THE SINGLE UNIT CONTROL PANEL (TOUCH SCREEN VERSION 7 "):

Power supply: single-phase 230 Vac (+ 15%, -15%) 50 Hz (± 3 Hz)

Maximum absorbed current: 16 A

Approximate dimensions of the electronic box, including the size of the connectors and the flashing light:
height 650, width 550, depth 350 (dimensions in mm)

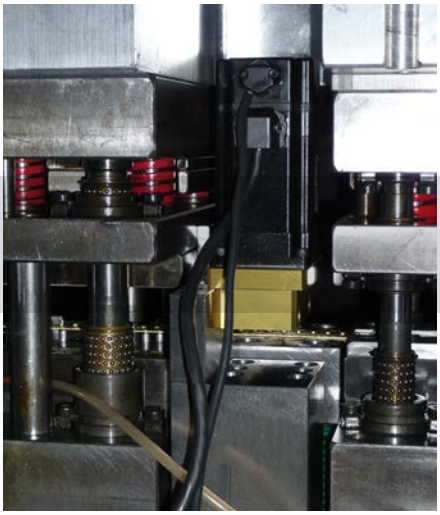

Example of application by high-speed tools

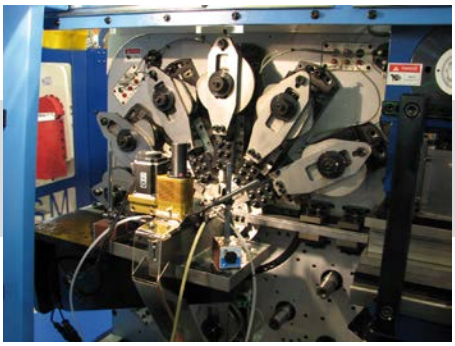

Example of application by presses like Bihler or similar

Example of application with 6 tapping units by components for automotive industry

150 STROKES/MINUTE

BLIND HOLES THREADINGS

EASY INSTALLATION

THREADINGS IN SAFETY

HIGH PERFORMANCE

UP TO 8 THREADINGS WITH ONE CONSOLE

PRODUCTS

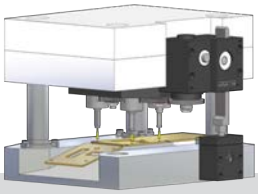

Mechanical in die tapping units

Standard components

Special parts according to drawing

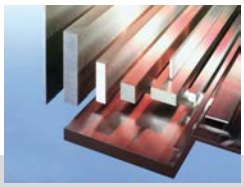

Teels and ground steel plates

SERVICE

- **TECHNICAL SUPPORT** BY QUALIFIED PERSONNEL
- MORE THAN **30 YEARS OF EXPERIENCE,** IN SPECIFIC SOLUTION FOR EVERY SITUATION
- SALES **ASSISTANCE EVEN AFTER** THE PURCHASE
- **PRICE-QUALITY,** READY FOR EACH COMPARISON
- ADVANCED **CHECKING CONTROLS**
- ALWAYS THINKING ON **NEW SOLUTIONS**

Please visit our Web Site
www.intercomonline.it

TO DOWNLOAD OUR TECHNICAL FILES

INTERCOM
Excellence in tool solutions

We form the quality

Via C. Cattaneo 18/22 - 20064 Gorgonzola (Milano)
Tel. +39 02 95300202 Fax +39 02 95300023
www.intercomonline.it - intercom@intercomonline.it

INTERCOM
Excellence in tool solutions

www.intercomonline.it

ISO Stars EU
IT. 1901201
Intercom Srl - EN ISO 9001:2015